TRANSMISSION CONTROL CABLE

COMPONENTS

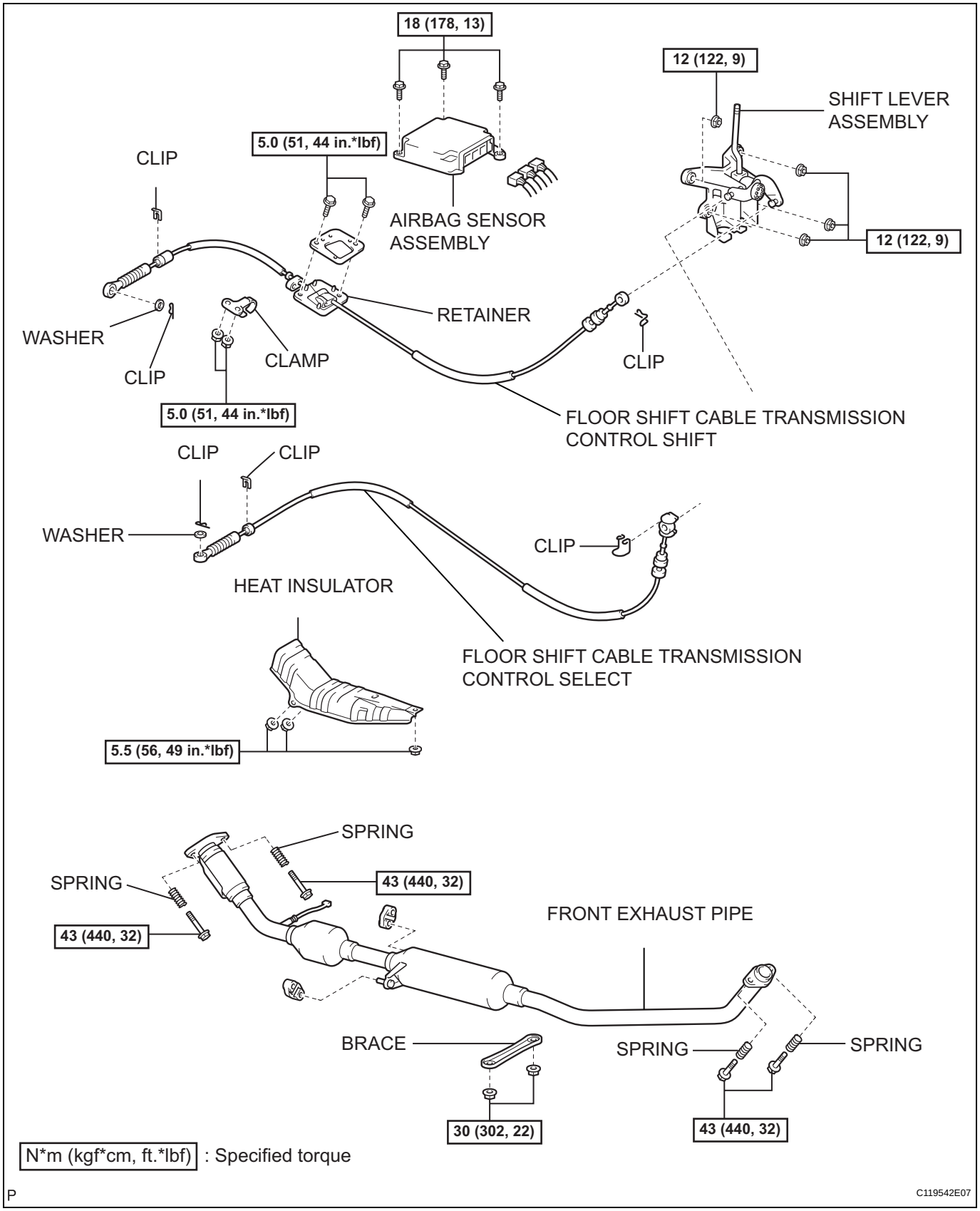

MX

REMOVAL

1. **PRECAUTION**
   NOTICE:
   Do not open the cover or the case of the ECU and various electrical devices unless absolutely necessary (If the IC terminals are touched, the IC may be destroyed by static electricity.).

2. **DISCONNECT BATTERY NEGATIVE TERMINAL**
   CAUTION:
   Wait for 90 seconds after disconnecting the cable to prevent airbag deployment.

3. **REMOVE SHIFT LEVER KNOB SUB-ASSEMBLY**

4. **REMOVE INSTRUMENT CLUSTER FINISH PANEL ASSEMBLY CTR (See page IP-6)**

5. **REMOVE INSTRUMENT PANEL BOX (See page IP-7)**

6. **REMOVE INSTRUMENT PANEL FINISH PANEL LOWER CENTER (See page IP-7)**

7. **REMOVE AIR BAG SENSOR ASSEMBLY CENTER (See page RS-314)**

8. **REMOVE EXHAUST PIPE ASSEMBLY**
   HINT:
   (See page EX-2)

9. **REMOVE FRONT FLOOR HEAT INSULATOR NO.1**
   (a) Remove the 3 nuts and heat insulator No. 1.

10. **SEPARATE FLOOR SHIFT CABLE TRANSMISSION CONTROL SHIFT**
    (a) Remove the clip, washer and disconnect the cable end of the shift cable from the shift lever assembly.

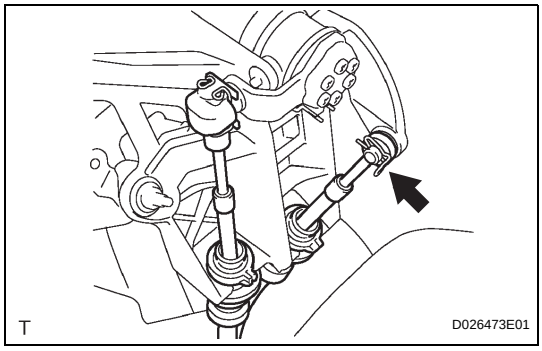

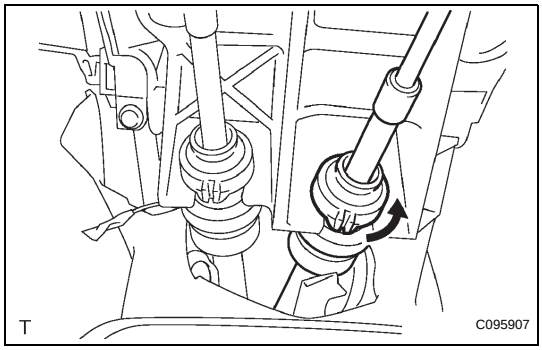

    (b) Turn the lock and disconnect the shift cable from the shift lever assembly.
    (c) Pull out the shift cable from the floor.

MX

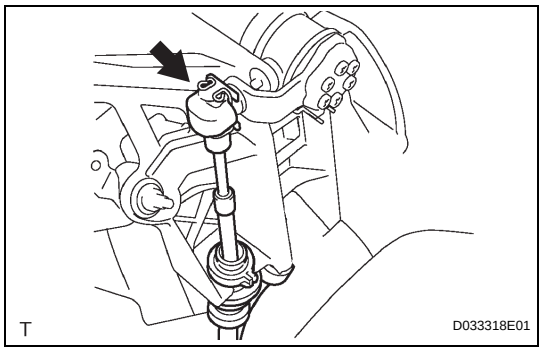

11. SEPARATE FLOOR SHIFT CABLE TRANSMISSION CONTROL SELECT

(a) Remove the clip and disconnect the cable end of the select cable from the shift lever assembly.

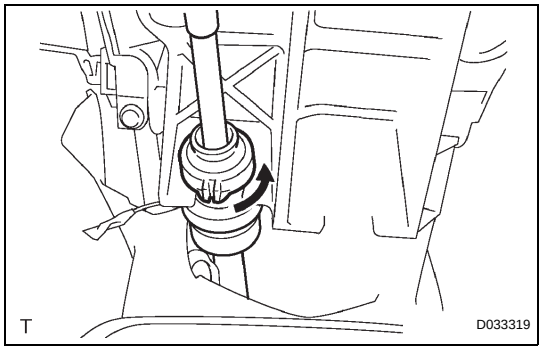

(b) Turn the lock and disconnect the select cable from the shift lever assembly.

(c) Pull out the select cable from the floor.

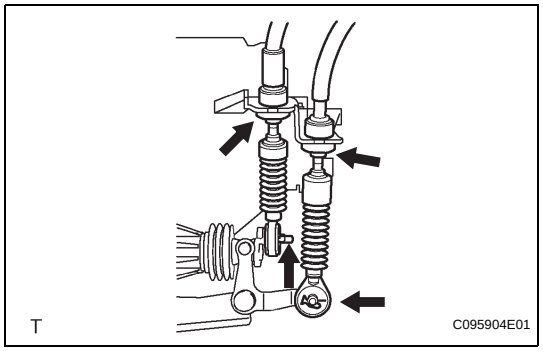

12. REMOVE TRANSMISSION CONTROL CABLE ASSEMBLY

(a) Remove the 2 clip, 2 washer and disconnect the cable end of the control cable assembly from the transaxle.

(b) Remove the 2 clip and disconnect the control cable assembly from the bracket.

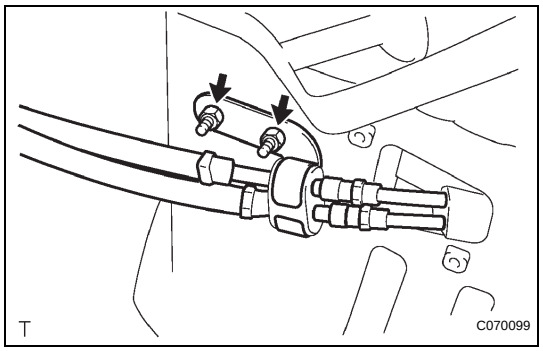

(c) Remove the 2 nuts and disconnect the control cable assembly.

(d) Disconnect the control cable assembly from the clamp.

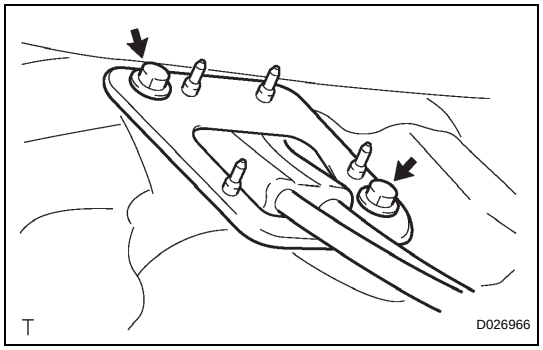

(e) Remove the 2 bolts from the retainer.

(f) Pull out the control cable assembly from the floor.